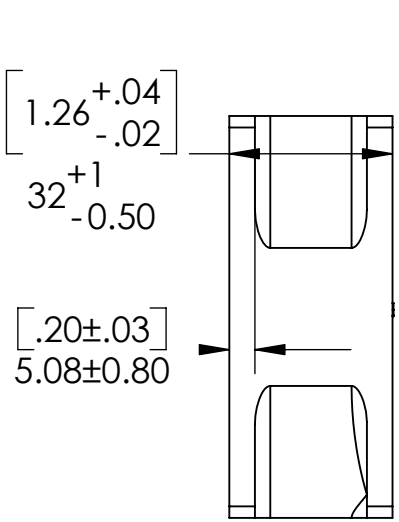

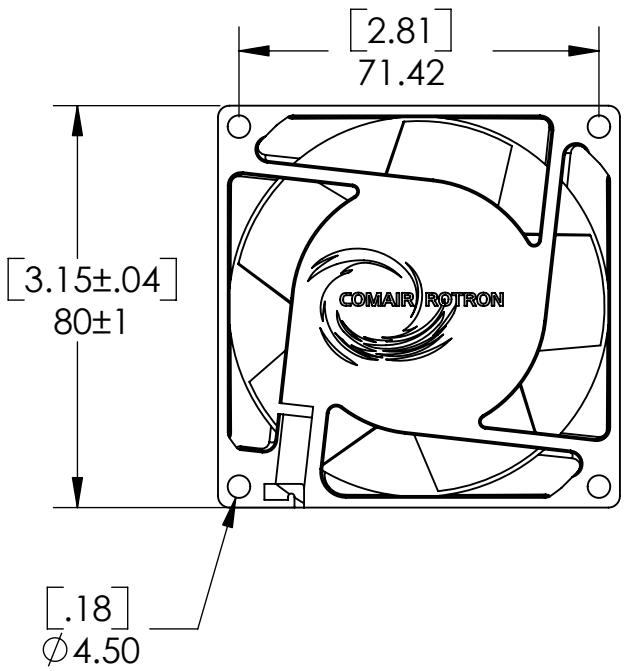

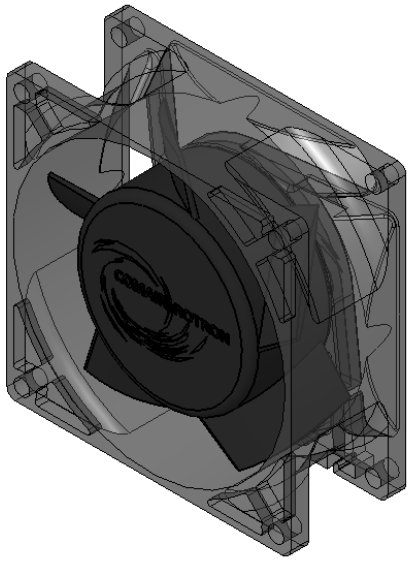

RECOMMNEDED CUTOUT

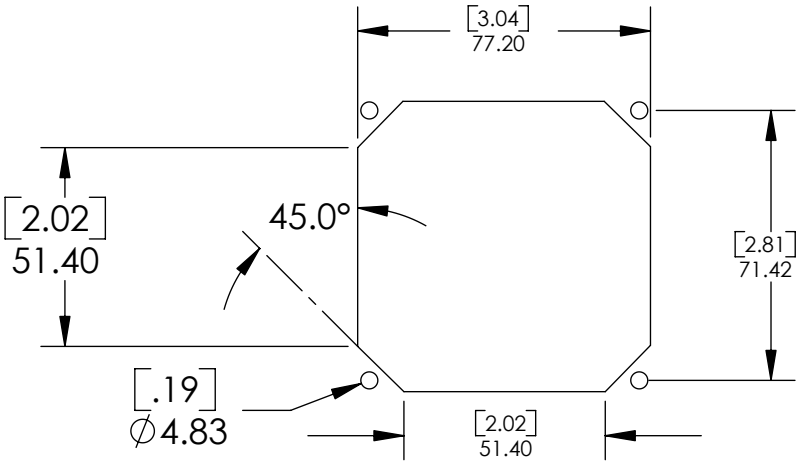

COMAIR ROTRON

CONTACT INFO: WWW.COMAIRROTRON.COM	SALES@COMAIRROTRON.COM
TOLERANCE UNLESS OTHERWISE SPECIFIED 2 PL. DEC. ± .03 [..8] 3 PL. DEC. ± .010 [.25] ANGULAR ± 30'	AMERICAN PROJECTION [IN] MM
	(619) 661 - 6688
	3D MODEL FOUND AT..

SPRINT